ENVASES SANZ BELDA, S.L.

Technical comercial data ref.

N-14 T.N-16

Serie NOVA

CAPO011604 30-11-22

TECHNICAL DATA:

Material: Polypropylene copolymer of first quality, suitable for contact with food according to current regulations.

Colours: White standard. Consult for other colours.

Useful Volume: 14,0 litres
Volume to the edge: 15,2 litres

Weight of the bucket: 499 g. approx.
Weight of the lid: 131 g. approx.
Weight of the handle: - metal: 55 g. approx.
- plastic: 3 g. approx.
Total Weight: 688 g. approx.

Decorative surface flat inks: 190 x 822 mm (height x perimeter)
Design surface photographic finish: 195 x 845 mm (height x perimeter)

MEASUREMENTS:

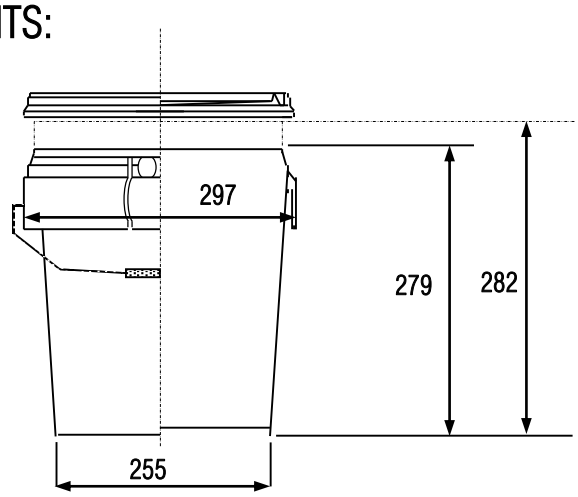

Measurements in millimetres

GROUPING OF TRANSPORT:

Buckets: 360 buckets per pallet
Pallet dimensions: 1200 x 900 x 1845 (see drawing)

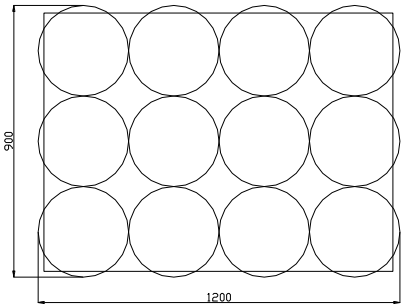

Lids: 90 lids per bag, this serves as a packaging of transportation

Bag dimension: ∅ 298 x 870

ENVASES SANZ BELDA , S.L. - Polígono San José, Av. Valencia, Parc. 7 - Apdo. Correos: 46
46812 Aielo de Malferit, Valencia (España)
Tel.: 96 236 02 32 - E-mail: admi@envasessanzbelda.es – Web: www.envasessanzbelda.es